Required Tools			
Tool	**Part Number**	**Part Description**	**Qty**
A	1P-2420	Transmission Repair Stand	1
B	138-7573	Link Bracket	2
C	154-6181	Forcing Screw	1
D	138-7574	Link Bracket	2
	5F-7366	Forcing Screw	1
	1P-5546	Crossblock	1
	1U-9889	Crossblock	1
E	1P-0520	Driver Group	1
	6V-7888	Puller Leg	2
	1H-3112	Puller Assembly	1
	1P-5551	Adjustable Screw Assembly	1
F	1U-8846	Gasket Sealant	1

Start By:

a. Remove the final drive. Refer to Disassembly and Assembly, "Final Drive - Remove".

Note: Cleanliness is an important factor. Before the disassembly procedure, the exterior of the component should be thoroughly cleaned. This will prevent dirt from entering the internal mechanism.

1. Put an alignment mark across the sections of the final drive for assembly purposes. The parts must be reinstalled in the part's original locations.

Illustration 1 g00708089

2. Fasten the final drive to Tooling (A), as shown. The combined weight of the final drive and final drive sprocket is approximately 312 kg (688 lb).

3. Remove bolts (1) and the washers that hold the cover in position.

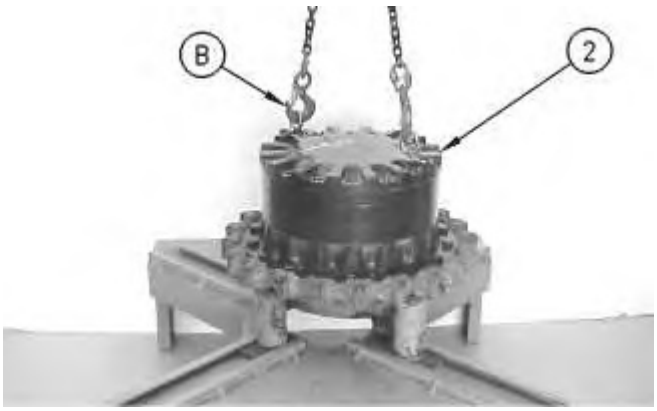

Illustration 2 g00708090

4. Remove the setscrews from the cover. Fasten Tooling (B) and a suitable lifting device to cover (2), as shown. The weight of cover (2) is approximately 32 kg (70 lb). Remove cover (2).

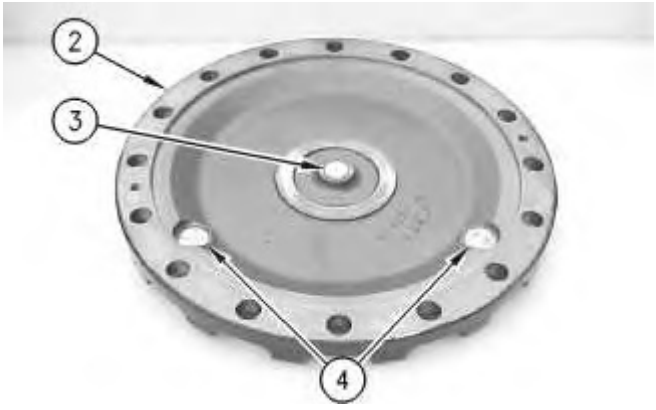

Illustration 3 g00708091

5. Remove thrust plate (3) from cover (2).

6. Remove plugs (4) from cover (2).

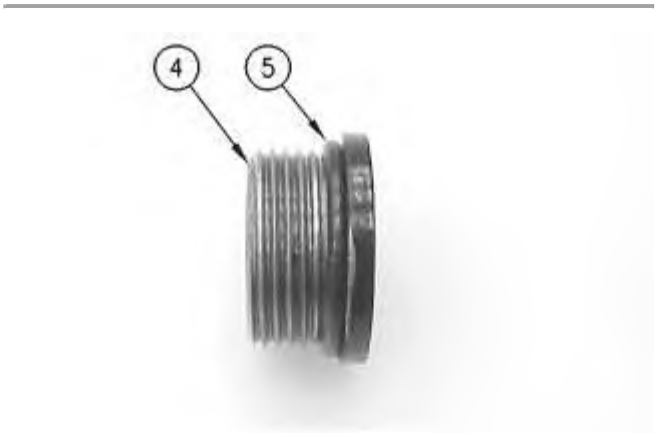

Illustration 4 g00708235

7. Remove O-ring seals (5) from both plugs (4) that were in the cover.

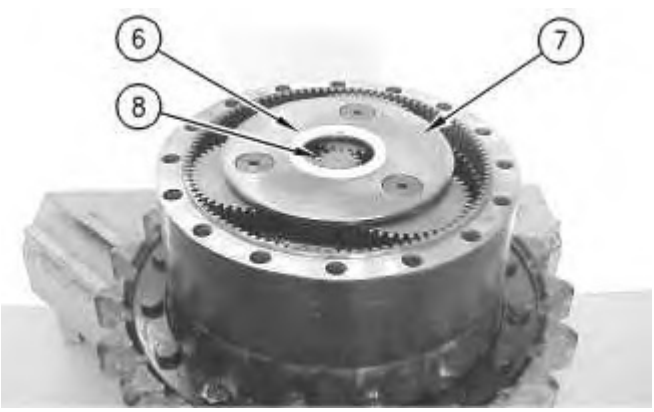

Illustration 5 g00708092

8. Remove spacer (6) from carrier assembly (7).
9. Remove sun gear (8) from carrier assembly (7).
10. Remove carrier assembly (7) by lifting the carrier assembly straight up. The weight of carrier assembly (7) is approximately 14 kg (30 lb).

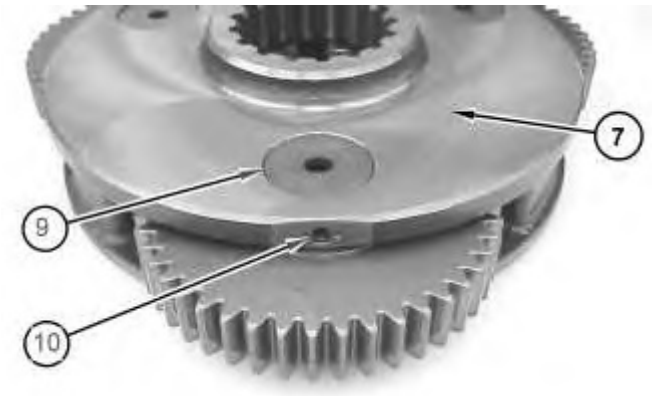

Illustration 6 g01304883

11. Disassemble carrier assembly (7), as follows.
    a. Drive spring pin (10) into planetary shaft (9) with a hammer and a punch.

Illustration 7 g00708144

b. Remove planetary shaft (9) with spring pin (10) from the carrier assembly.

c. Remove spring pin (10) from planetary shaft (9) with a hammer and a punch.

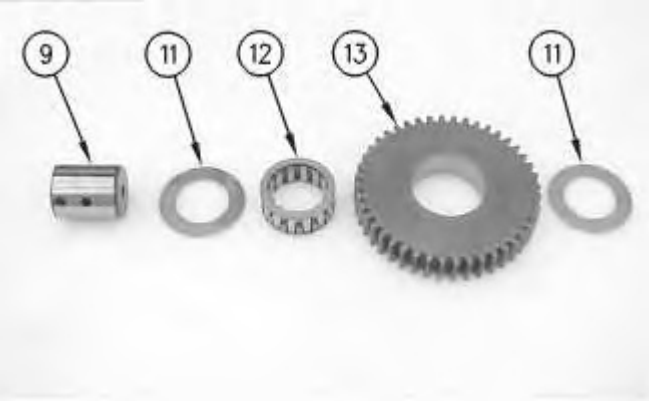

Illustration 8 g00708218

d. Remove thrust washers (11) and planetary gear (13) from the carrier assembly.

e. Remove bearing (12) from planetary gear (13).

12. Repeat Steps 11.a through 11.e in order to remove the remaining planetary gears from the carrier assembly.

Thank you very much for your reading.

Please click here to buy

After you pay.

Then, you can download the complete manual instantly.

No waiting.