Disassembly and Assembly
C3.8 Engines for Caterpillar Built Machines

Media Number -UENR0129-08 **Publication Date -01/09/2015** **Date Updated -19/05/2016**

i06617508

Inlet Manifold - Remove and Install

SMCS - 1058-010

Removal Procedure

Start By:

a. Remove the fuel injection manifold.

b. Remove the intake air heater.

c. Remove the exhaust gas valve.

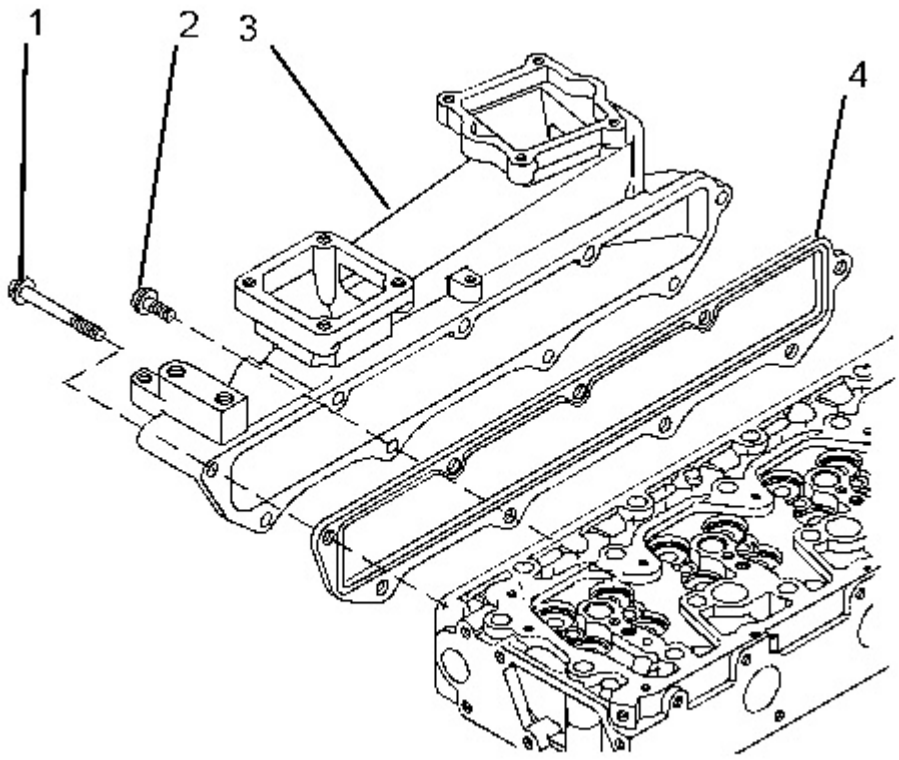

Illustration 1 g02858877

1. Remove bolts (1) and bolts (2). Remove inlet manifold (3) and gasket (4).

Installation Procedure

1. Install inlet manifold (3) in the reverse order of removal.

End By:

a. Install the exhaust gas valve.

b. Install the intake air heater.

c. Install the fuel injection lines.

Disassembly and Assembly
C3.8 Engines for Caterpillar Built Machines

Media Number -UENR0129-08 **Publication Date -01/09/2015** **Date Updated -19/05/2016**

i06622996

Inlet and Exhaust Valves - Remove and Install

SMCS - 1105-010

Removal Procedure

Table 1

Required Tools			
Tool	**Part Number**	**Part Description**	**Qty**
A	1P-3527	Valve Spring Compressor	1
B	4C-8134	Seal Remover	1
	1U-7600	Slide Hammer Puller Gp	1

Start By:

a. Remove the cylinder head assembly.

1. Clean the bottom face of the cylinder head. Check the depth of the valves below the face of the cylinder head before the valve springs are removed. Refer to Specifications, "Cylinder Head Valves" for the correct dimensions.

2. Place a temporary identification mark on the heads of the valves to identify the correct position.

   Note: Do not stamp the heads of the valves. Stamping or punching the heads of the valves could cause the valves to fracture.

WARNING

Personal injury can result from being struck by parts propelled by a released spring force.

Make sure to wear all necessary protective equipment.

Follow the recommended procedure and use all recommended tooling to release the spring force.

NOTICE

Ensure that the valve spring is compressed squarely or damage to the valve stem may occur.

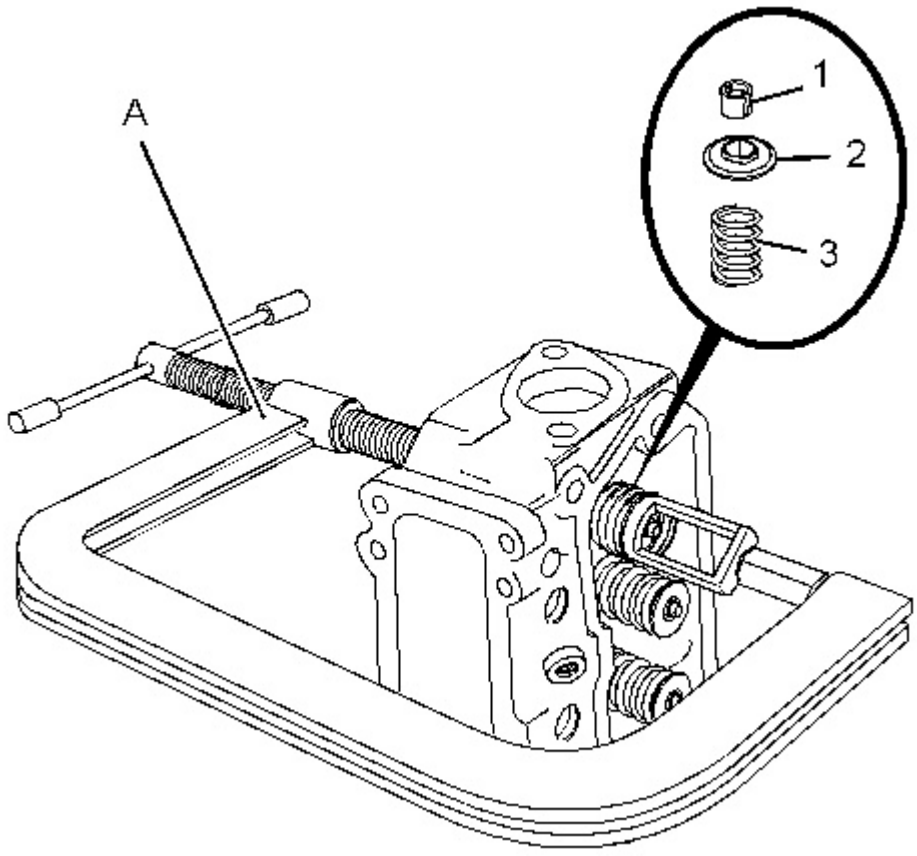

Illustration 1 g01333469

Typical example

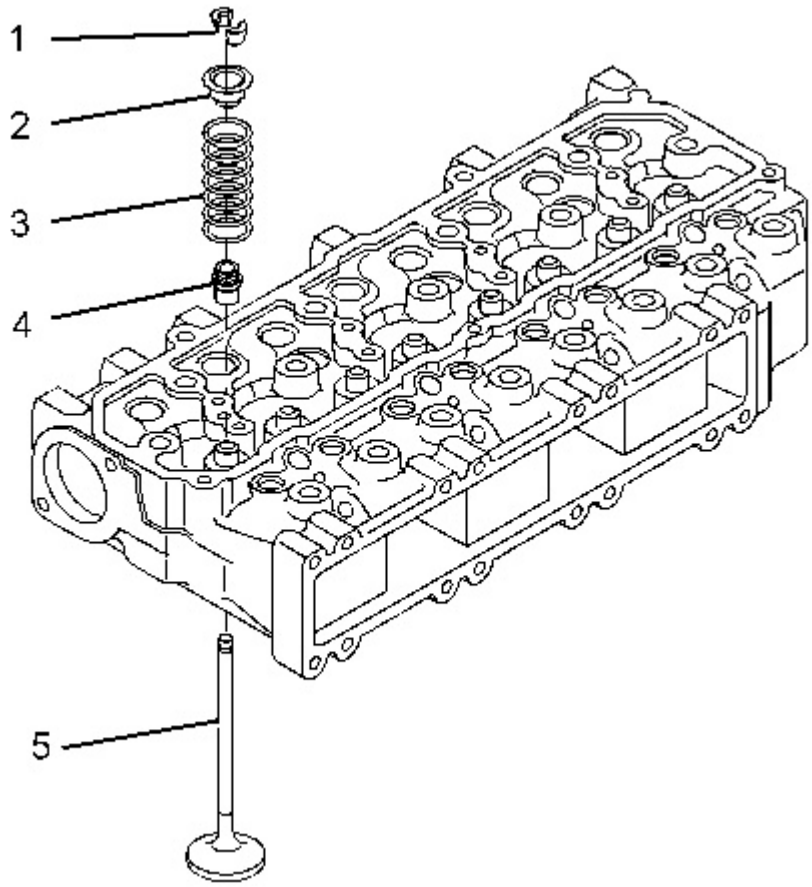

Illustration 2 g01333471

Typical example

3. Use Tooling (A) to compress the appropriate valve spring (3). Remove valve keepers (1).

   Note: Do not compress the valve spring so that valve spring retainer (2) touches valve stem seal (4).

4. Remove Tooling (A).

5. Remove valve spring retainer (2). Remove valve spring (3).

6. Remove valve (5).

7. Use Tooling (B) to remove valve stem seal (4).

8. Repeat Steps 3 through 7 to remove the remaining inlet and exhaust valves.

Installation Procedure

Table 2

Required Tools			
Tool	**Part Number**	**Part Description**	**Qty**
A	1P-3527	Valve Spring Compressor	1

C	4C-6373	Seal Installer	1
	4C-6366	Valve Guide Driver	1

1. Clean all components of the cylinder head assembly. Ensure that all ports, all coolant passages, and all lubrication passages in the cylinder head are free from debris. Follow Steps 1.a through 1.e to inspect the components of the cylinder head assembly. Replace any components that are worn or damaged.

    a. Inspect the cylinder head for wear and for damage. Refer to Systems Operation, Testing and Adjusting, "Cylinder Head Inspect".

    b. Inspect the valve seats for wear and for damage. Refer to Specifications, "Cylinder Head Valves" for further information.

    c. Inspect the valve guides for wear and for damage. Refer to Specifications, "Cylinder Head Valves" for further information.

    d. Inspect the valves for wear and for damage. Refer to Specifications, "Cylinder Head Valves".

    e. Inspect the valve springs for the correct length. Refer to Specifications, "Cylinder Head Valves".

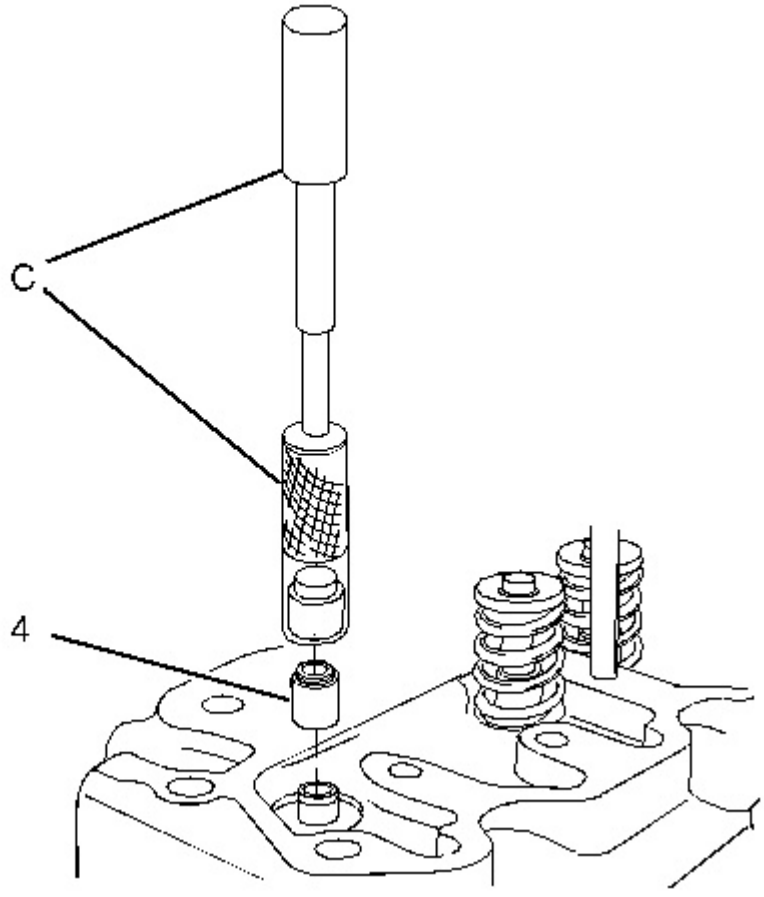

Illustration 3 g01333472

Typical example

2. Use Tooling (C) to install new valve stem seals (4) onto each of the valve guides.

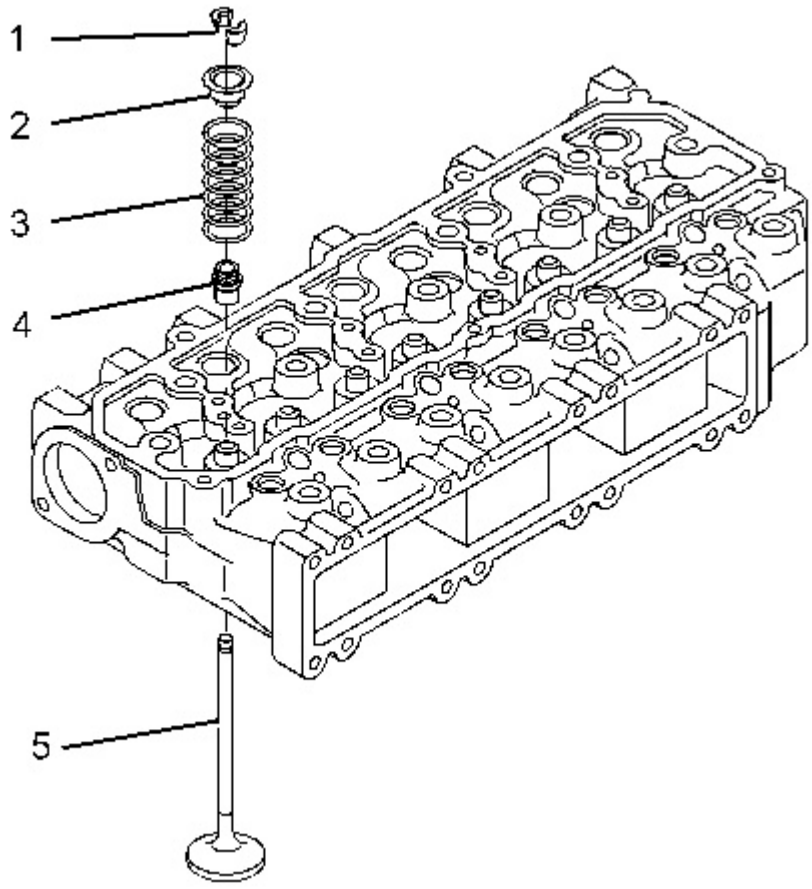

Illustration 4 g01333471

Typical example

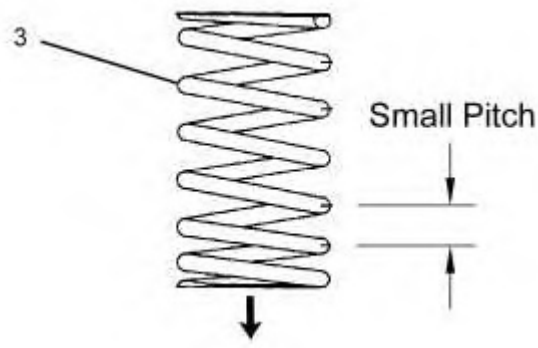

Illustration 5 g02891838

3. Lubricate the stem of valve (5) with clean engine oil. Install valve (5) in the appropriate position in the cylinder head. Check the depth of the valve below the face of the cylinder head. Refer to Systems Operation, Testing and Adjusting, "Valve Depth - Inspect" for more information.

Thank you very much for your reading.
Please click here to buy
After you pay.
Then, you can download the complete manual instantly.
No waiting.