Document Title:	Function Group:	Information Type:	Date:
Power train, description	**400**	**Service Information**	**2014/5/3 0**
Profile: **EXC, EW145B [GB]**			

Power train, description

Pressurized oil from main hydraulic pump (2) flows through main control valve (4), center passage (5), to travel motor (6) that drives the transfer gearbox (9).
Rotational force of the travel motor is reduced through transfer gearbox (9), then transferred through propeller shafts (10) and reduced again at the differential and reduction gear of the front and rear axles (11, 12).
High torque is transmitted via the planetary hubs to each wheel.
Vehicle speed is controlled by a travel speed adjust valve connected to pedal (7) in the cab, that controls engine speed and pump flow.

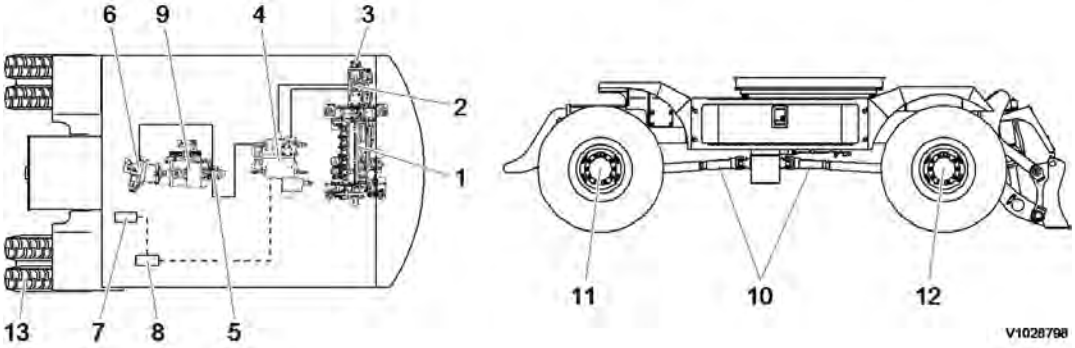

Figure 1
Power train system

1	Engine	6	Travel motor	11	Front axle
2	Main pump	7	Remote control valve (pedal)	12	Rear axle
3	Servo hydraulic pump	8	Forward/reverse select valve	13	Tire
4	Main control valve	9	Transfer gearbox		
5	Center passage	10	Propeller shaft		

Document Title:	Function Group:	Information Type:	Date:
Power train, mechanism	**400**	**Service Information**	**2014/5/3 0**
Profile: **EXC, EW145B [GB]**			

Power train, mechanism

Motive force from the engine is transmitted via the flywheel to the pump coupling, where it alleviates torsional vibration and transfers engine power to the hydraulic pump.
Travel direction Forward / Reverse is achieved through main control valve oil flow to the travel motor ports which cause clockwise / counter clockwise rotation of the motor output shaft.
This rotational force is transferred to the gearbox, axles, and wheels.
Therefore this system is a 4WD power train driven by a hydraulic motor.

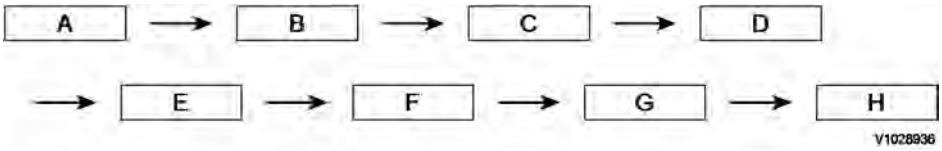

Figure 1
Power train, mechanism

A	Engine	E	Transfer gearbox
B	Main pump	F	Propeller shaft
C	Main control valve	G	Axle
D	Travel motor	H	Wheel

Engine speed control mechanism

Travel speed is controlled by the travel remote control valve (pedal) which controls engine speed and pump flow.
Set the travel mode switch at "T" position, the engine speed selection rotary switch to step 1 and depress the travel remote control valve (pedal) to control travel speed.

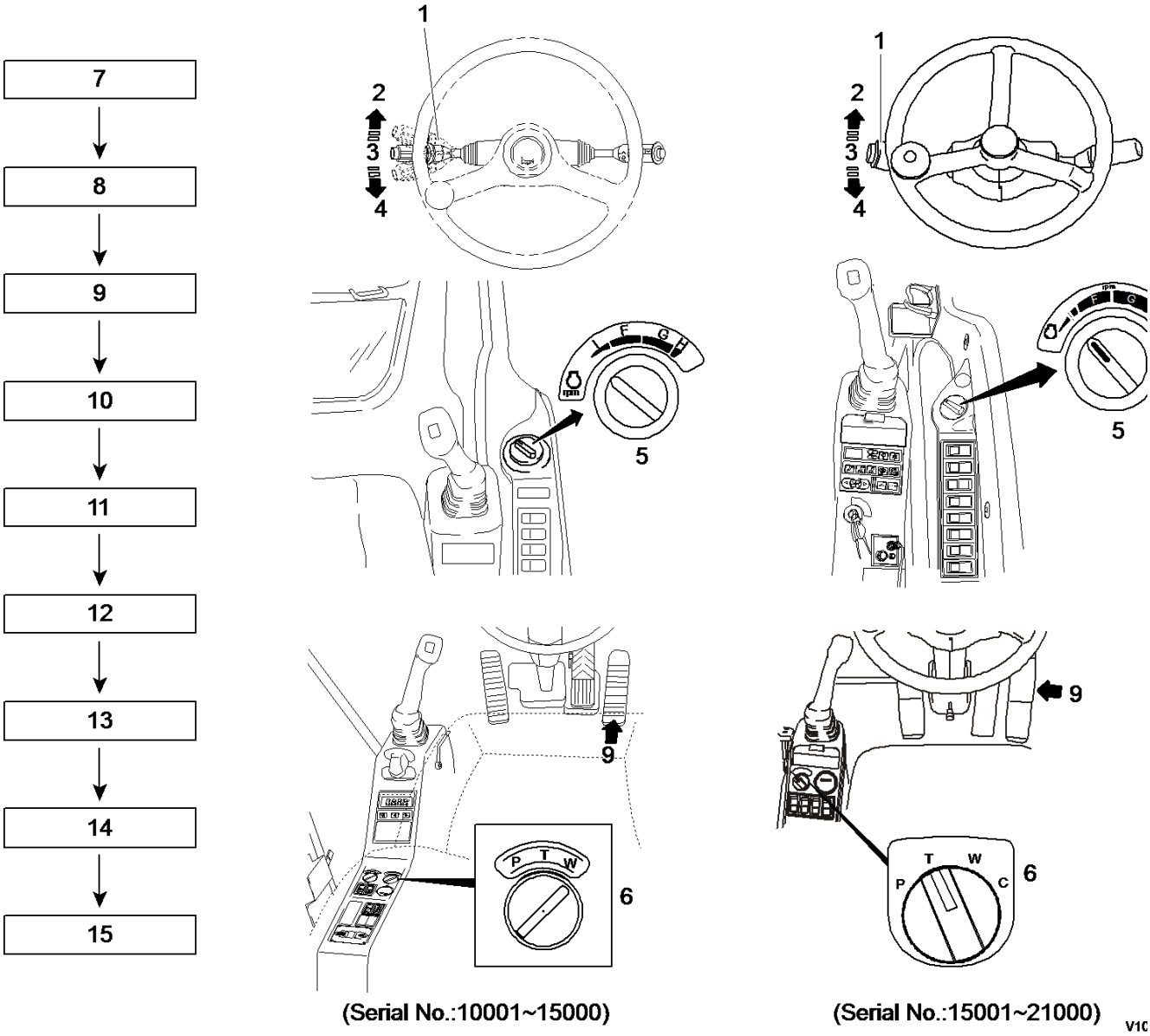

Figure 2
Engine speed control mechanism

1. Travel control lever
2. Forward
3. Neutral
4. Reverse
5. Engine rpm control rotary switch
6. Travel mode switch
7. Travel mode switch "T" position
8. Control receives "T" mode signal
9. Depress travel remote control valve (pedal)
10. Pressure sensor senses travel remote control valve secondary pilot pressure, based on pedal stroke and signals the controller.
11. V-ECU receives signal from pressure sensor and sends signal to E-ECU.
12. E-ECU receives signal from V-ECU and sends signal to engine.
13. Change engine throttle lever angle
14. Engine rpm, pump flow varies
15. Travel speed varies

Document Title:	Function Group:	Information Type:	Date:
Power train, travel interlock	**400**	**Service Information**	**2014/5/3 0**
Profile: **EXC, EW145B [GB]**			

Power train, travel interlock

System diagram

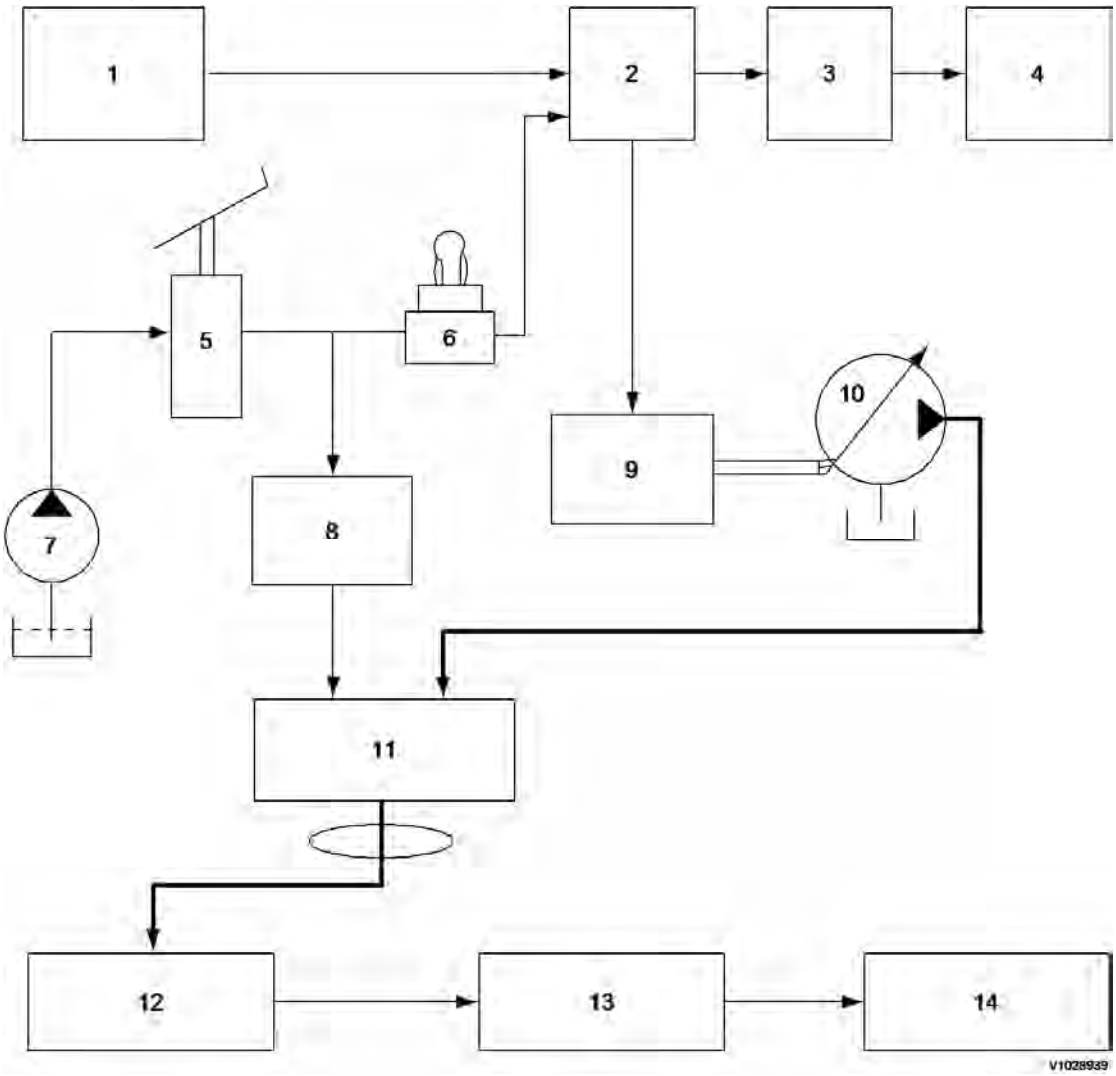

Figure 1
Travel interlock, system diagram

1	Engine speed control switch	6	Pressure sensor	11	Main control valve
2	V-ECU	7	Servo hydraulic pump	12	Travel motor
3	E-ECU	8	Forward / reverse solenoid valve	13	Transfer gearbox
4	Engine	9	Power shift valve	14	Axle
5	Remote control valve (pedal)	10	Main pump		

Mode selection and travel interlock

The controller compares related engine speed which are set by the engine speed control switch and travel remote control

valve (pedal), then selects the larger value to control engine speed and pump flow.

- If the remote control valve (pedal) is not actuated then engine speed and pump flow is controlled by the engine speed control switch.
- If the engine rpm selected by remote control valve (pedal) is larger than rotary switch value engine speed and pump flow is controlled by the remote control valve (pedal).
- If the engine speed selected by control switch is larger than remote control valve (pedal) value then the engine speed and pump flow is controlled by the control switch.
- If the control switch is set at step 1 then engine speed and pump flow is totally controlled by the remote control valve (pedal).

Document Title: **Power train, related components**	Function Group: **400**	Information Type: **Service Information**	Date: **2014/5/3 0**
Profile: **EXC, EW145B [GB]**			

Power train, related components

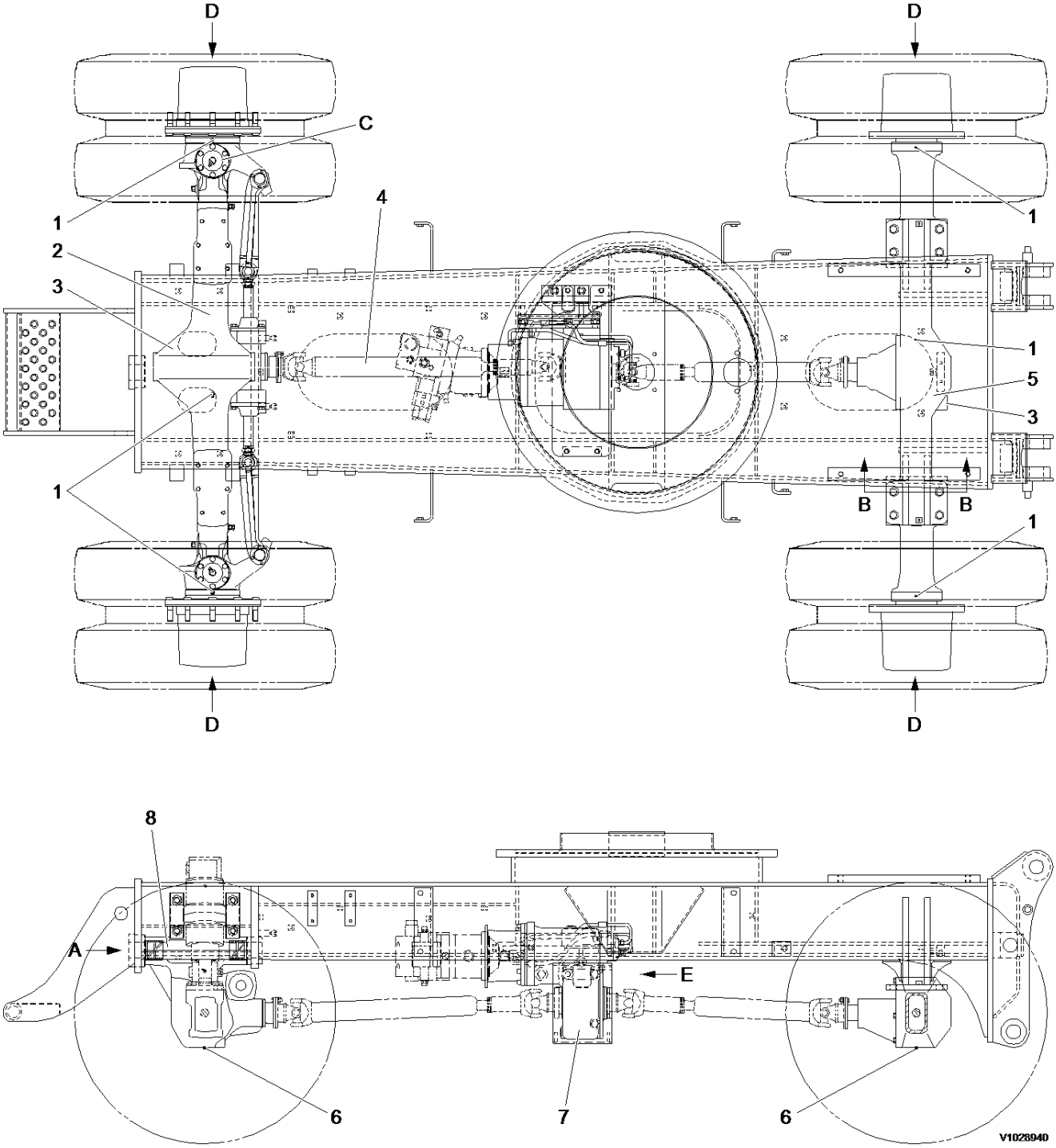

Figure 1
Power train, related components (1)

1 Air breather
2 Front axle
3 Inlet and oil level plug
4 Propeller shaft (front)
5 Rear axle
6 Oil drain plug
7 Transfer gearbox
8 Oscillating pin

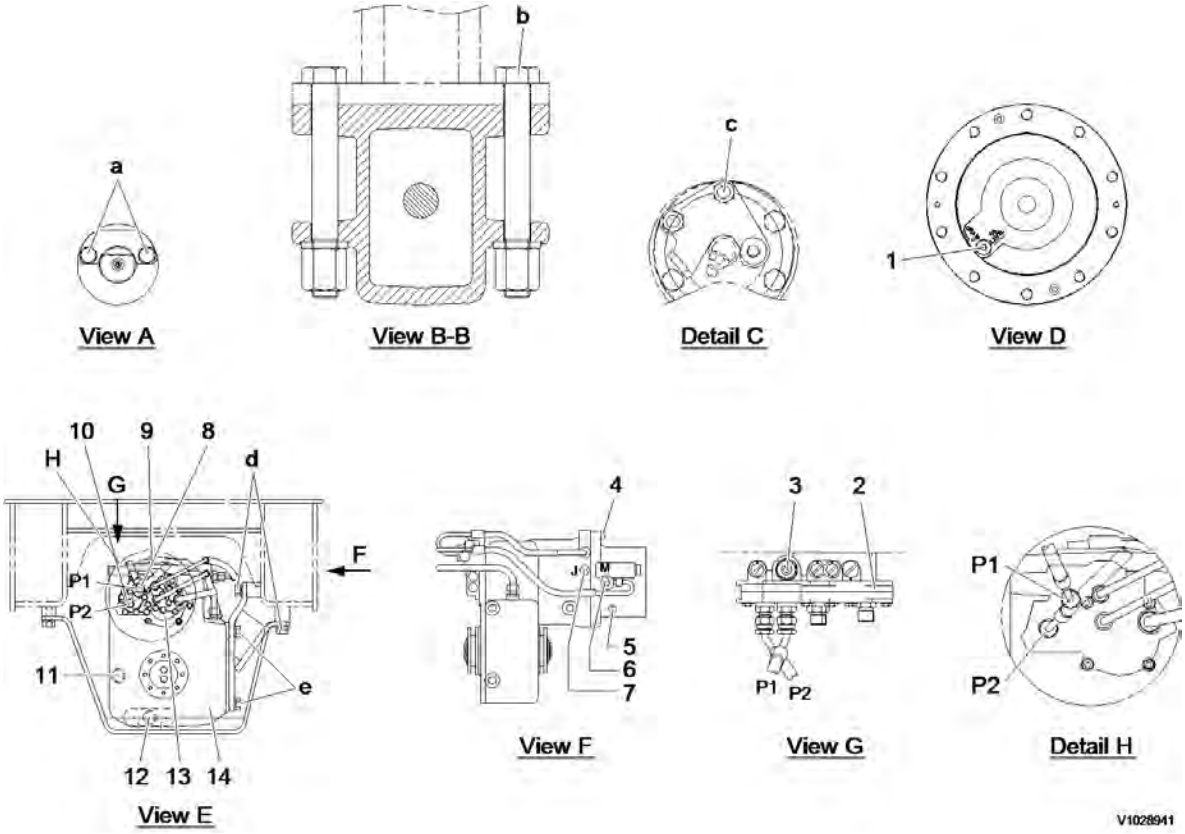

Figure 2
Power train, related components (2), machine serial no.: ~ 10899

1 Inlet oil level plug
2 Down shift protection device
3 Measuring plug for lubricant pressure
4 Air breather
5 Leakage oil plug
6 1st pressure check (M14 × 1.5)
7 2nd pressure check (M14 × 1.5)
8 2nd pressure connector (P1 port)
9 Air breather
10 1st pressure connector (P2 port)
11 Oil filler and oil level check plug
12 Oil drain plug
13 Suction filter (in travel motor governor)
14 Transfer gearbox

Tightening torque, unit : kgf m (lbf ft)

a 26.7 ± 2.7 (192.8 ± 19.5)
b 90.2 ± 9.0 (651.2 ± 65)
c 14.2 ± 0.7 (102.5 ± 5.1)
d 52.2 ± 5.2 (376.9 ± 37.5)
e 44 ± 2 (317.7 ± 14.4)

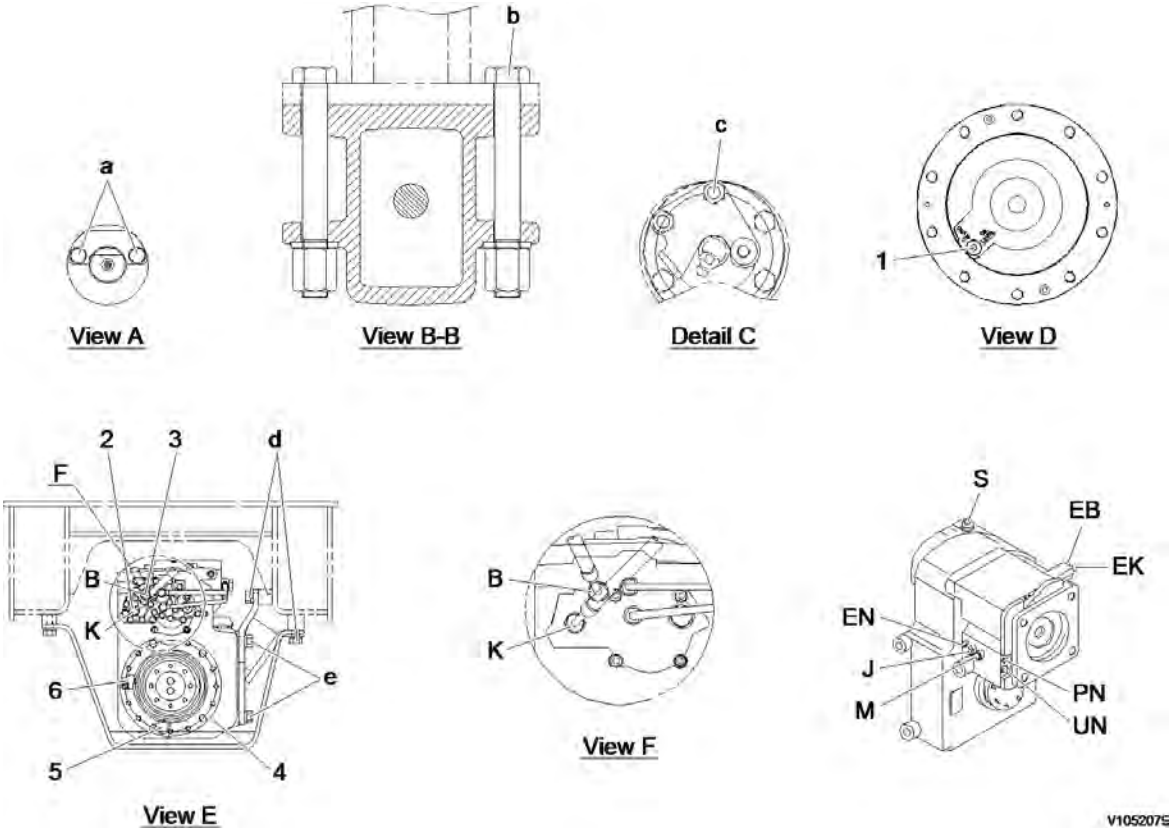

Figure 3
Power train, related components (2), machine serial no.: 10900 ~

1	Inlet oil level plug	EB	Bleed valve (brake)
2	Connection for clutch pressure (for low speed) K port	EK	Bleed valve (clutch)
3	Connection for brake pressure (for high speed) B port	EN	Bleed valve (emergency parking brake)
4	Transfer gearbox	PN	Emergency actuation parking brake
5	Oil drain plug	UN	Pressure relief valve
6	Oil filler and oil level check plug	M	Low speed (clutch)
		J	High speed (brake)
		S	Lubrication pressure

Tightening torque, unit : kgf m (lbf ft)

a	26.7 ± 2.7 (192.8 ± 19.5)
b	90.2 ± 9.0 (651.2 ± 65)
c	14.2 ± 0.7 (102.5 ± 5.1)
d	52.2 ± 5.2 (376.9 ± 37.5)
e	44 ± 2 (317.7 ± 14.4)

Document Title:	Function Group:	Information Type:	Date:
Power train, upper piping	**400**	**Service Information**	**2014/5/3 0**
Profile: **EXC, EW145B [GB]**			

Power train, upper piping

Port connection

Port connection

Part name	Port	Part name	Port	Remark
Gear pump	2 PL	Filter	IN	Brake supply
Service brake valve	BR1	Center passage	E	Service brake (front)
	BR2		F	Service brake (rear)
	T1	Tank	Tr6	Service brake (return)
	T2			
Center passage	C	Tank	TR5	Travel gearbox leakage
	G	Return pipe	R5	Axel locking return
	D	Solenoid valve (1)	A3	Axel locking supply
Brake supply valve	P	Filter	OUT	Brake supply
	T	Return pipe	R6	-
	BC	Service brake valve	P1	Service brake (front)
	AC		P2	Service brake (rear)
Gear shifting control valve	A	Center passage	B	Gear shift high speed
	B		A	Gear shift low speed
	P	Accumulator block	S1	-
	T	Suction pipe	-	Return
	PS	Block	A	-
Steering unit	P	Gear pump	1PL	Steering supply
	R	Center passage	N	Steering (right)
	L		M	Steering (left)
	T	Return pipe	R4	Steering return

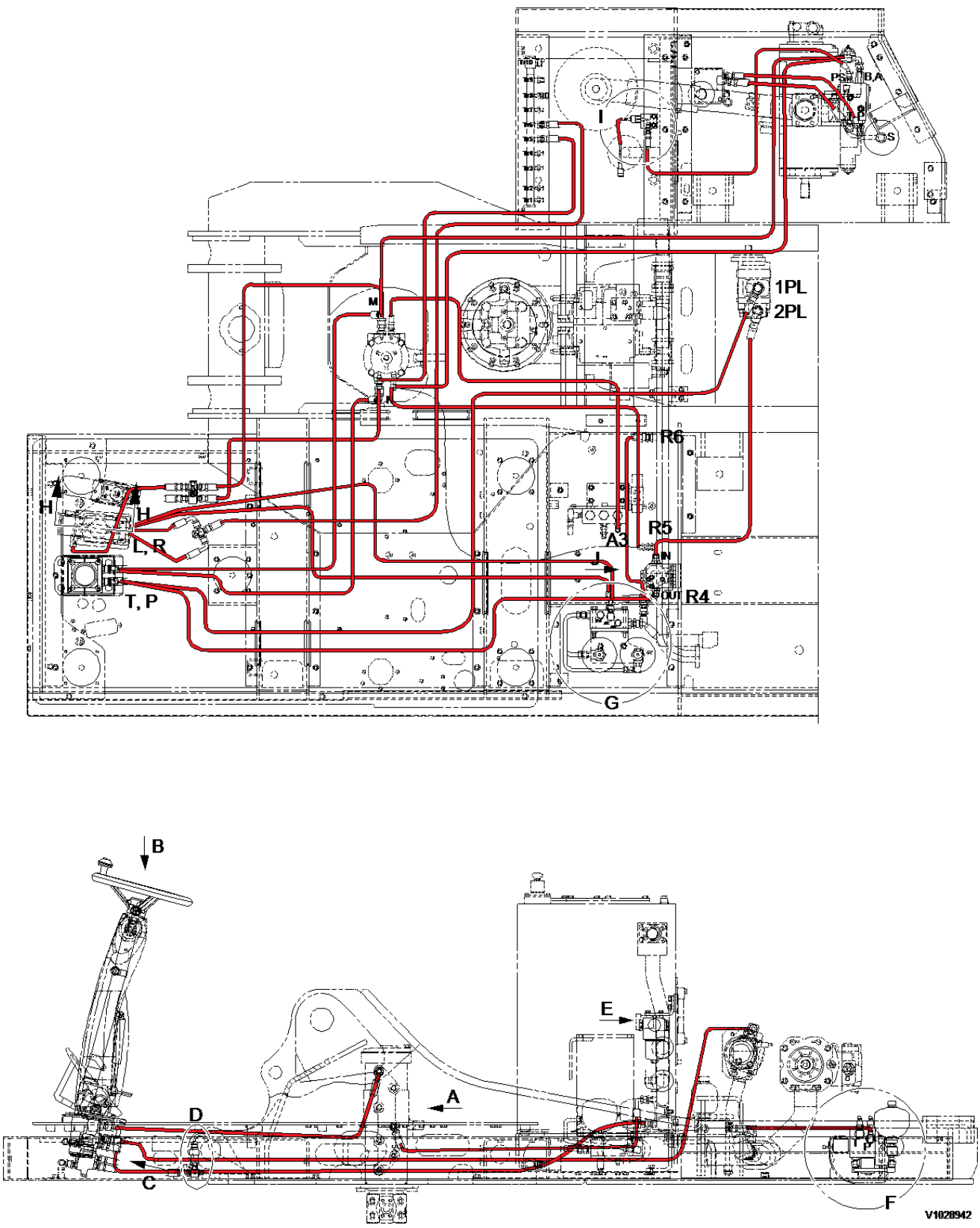

Figure 1
Power train, upper piping (1)

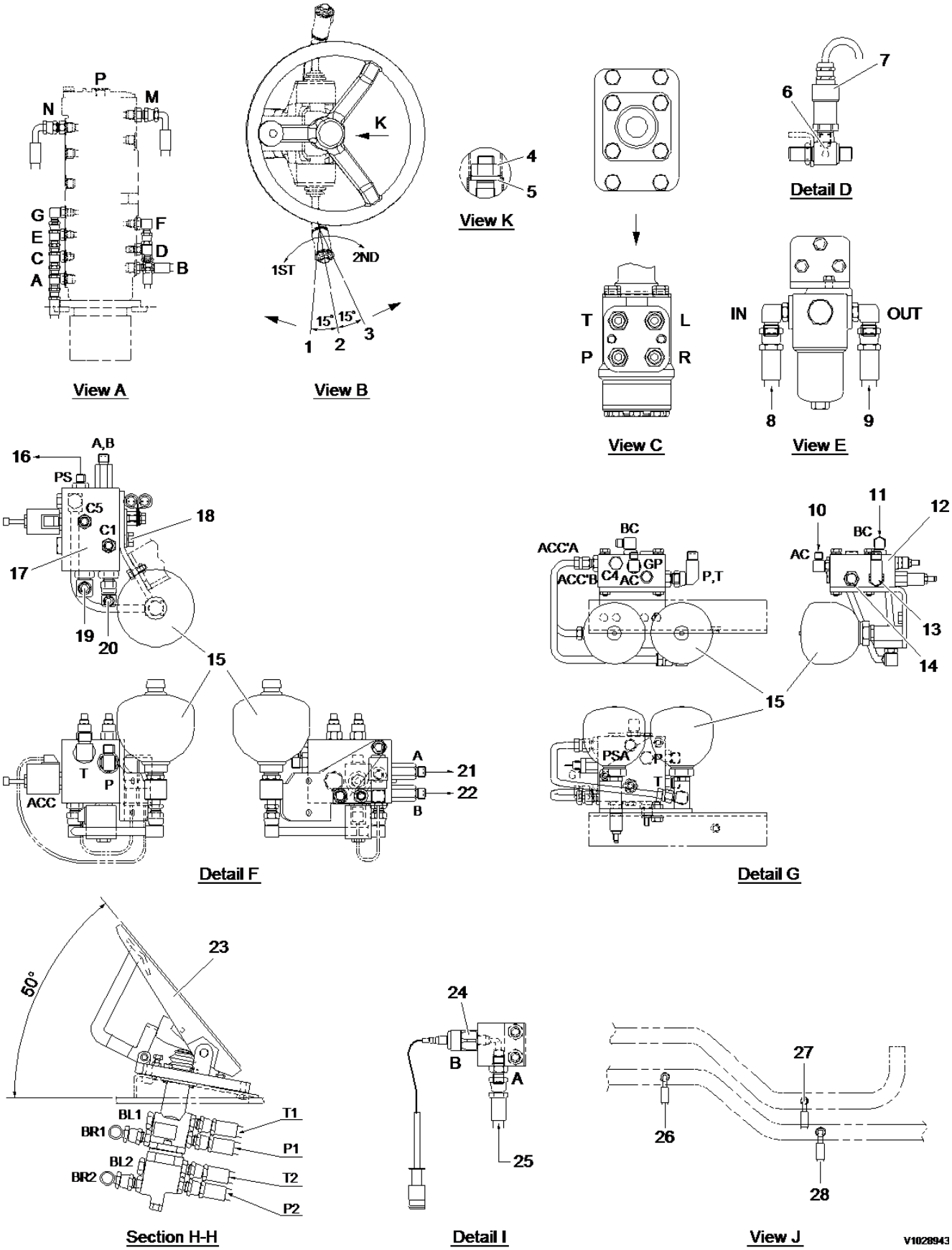

Figure 2
Power train, upper piping (2)

1	Forward	15	Accumulator

2	Neutral	16	PS: to block "A"
3	Reverse	17	Travel motor control valve
4	Nut Tightening torque: 4 ± 0.5 kgf·m (28.9 ± 3.6 lbf·ft)	18	Screw Tightening torque: 4.5 ± 0.5 kgf·m (32.5 ± 3.6 lbf·ft)
5	Washer	19	T: to suction pipe
6	Shuttle valve	20	P: from servo hydraulic block "S1"
7	Pressure sensor	21	A: to center passage "B"
8	From pump "2PL"	22	B: to center passage "A"
9	To brake supply valve "P"	23	Brake valve assembly
10	AC: to service brake valve "P2"	24	Pressure switch
11	BC: to service brake valve "P1"	25	A: from control valve "PS"
12	Brake supply valve	26	R6: to brake supply valve "T"
13	T: to return pipe "R6"	27	R5: from center passage "G"
14	P: from filter "OUT"	28	R4: from steering unit "T"

Document Title:	Function Group:	Information Type:	Date:
Power train, lower piping	**400**	**Service Information**	**2014/5/3 0**
Profile: **EXC, EW145B [GB]**			

Power train, lower piping

Port connection (machine serial no.: ~ 10899)

Port connection

Part name	Port	Part name	Port	Remark
Center passage	A	Transfer gearbox	P2	Low speed
	B		P1	High speed
	C		D	Leakage
	D	Axle locking cylinder	In	-
	G	Axle locking cylinder	Drain	-
	E	Front axle	Right	-
			Left	-
	F	Rear axle	Right	-
			Left	-
	N	Steering cylinder	Right	-
	M	Steering cylinder	Left	-
Travel motor	X2	Transfer gearbox	M	Retard

Port connection (machine serial no.: 10900 ~)

Port connection

Part name	Port	Part name	Port	Remark
Center passage	A	Transfer gearbox	K	Low speed
	B		B	High speed
	C		D	-
	D	Axle locking cylinder	In	-
	G	Axle locking cylinder	Drain	-
	E	Front axle	Right	-
			Left	-
	F	Rear axle	Right	-
			Left	-
	N	Steering cylinder	Right	-
	M	Steering cylinder	Left	-
Travel motor	X2	Transfer gearbox	M	Retard

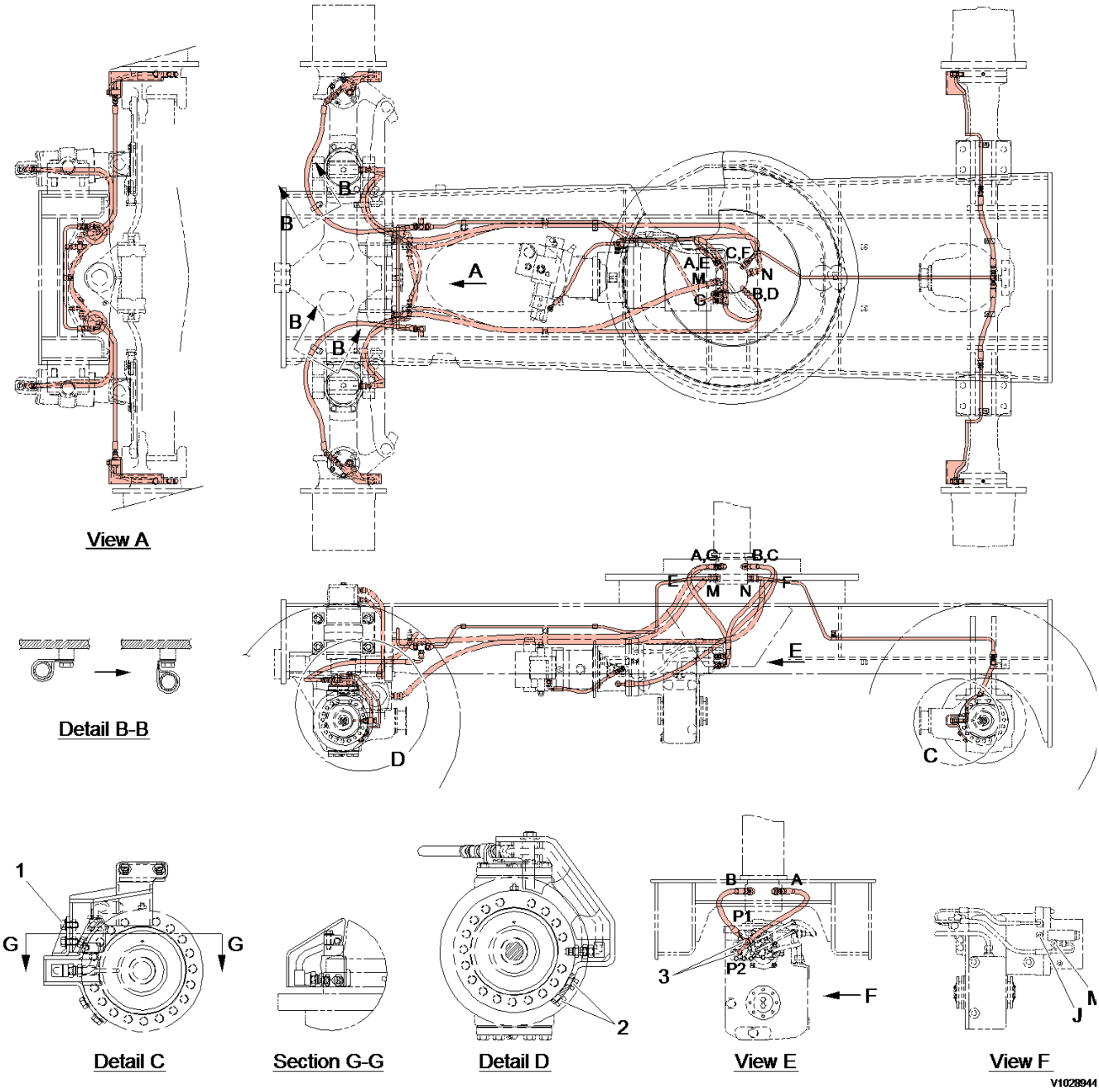

Figure 1
Power train, lower piping (machine serial no.: ~ 10899)

Tightening torque:	
1	6.5 ± 0.7 kgf m (46.9 ± 5.1 lbf ft)
2	6.5 ± 0.7 kgf m (46.9 ± 5.1 lbf ft)
3	2.85 ± 0.25 kgf m (20.6 ± 1.8 lbf ft)

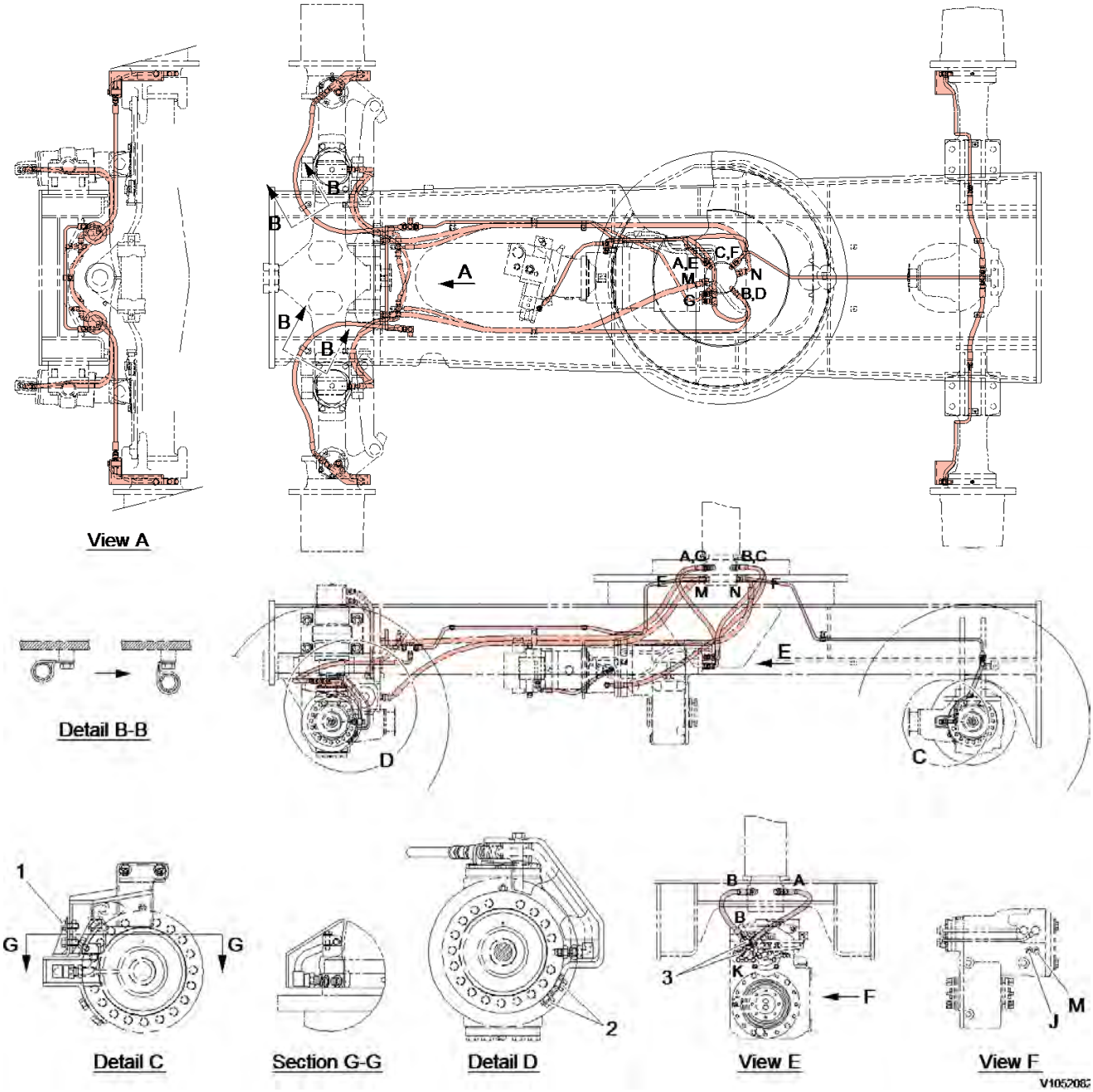

Figure 2
Power train, lower piping (machine serial no.: 10900 ~)

Tightening torque:	
1	6.5 ± 0.7 kgf m (46.9 ± 5.1 lbf ft)
2	6.5 ± 0.7 kgf m (46.9 ± 5.1 lbf ft)
3	2.85 ± 0.25 kgf m (20.6 ± 1.8 lbf ft)

Document Title:	Function Group:	Information Type:	Date:
Power train, troubleshooting	**400**	**Service Information**	**2014/5/3 0**
Profile: **EXC, EW145B [GB]**			

Power train, troubleshooting

Troubleshooting

System line	Function	Phenomenon	Troubleshooting	Remark
Control and related circuit	Travel interlock	Does not operate.	Operate at manual mode. (Set auto/manual switch at manual mode and control engine speed with throttle linkage).	Manual mode Travel, work possible
Forward/reverse/ neutral select related circuit	Forward/ reverse	Forward/reverse - function does not operate.	Check forward/reverse solenoid valve and related circuit. Replace faulty part.	
Pressure sensor faulty	Travel interlock	Engine speed is not controllable.	Replace sensor. Set travel mode at "T" and control engine rpm with engine speed control rotary switch.	Travel and work possible
Engine control unit (ECU)	Travel interlock	Engine speed is not controllable.	Check related circuit. Replace faulty part. Operate at manual mode.	

Document Title:	Function Group:	Information Type:	Date:
Power train, schematic diagram	**400**	**Service Information**	**2014/5/3 0**
Profile: **EXC, EW145B [GB]**			

Power train, schematic diagram

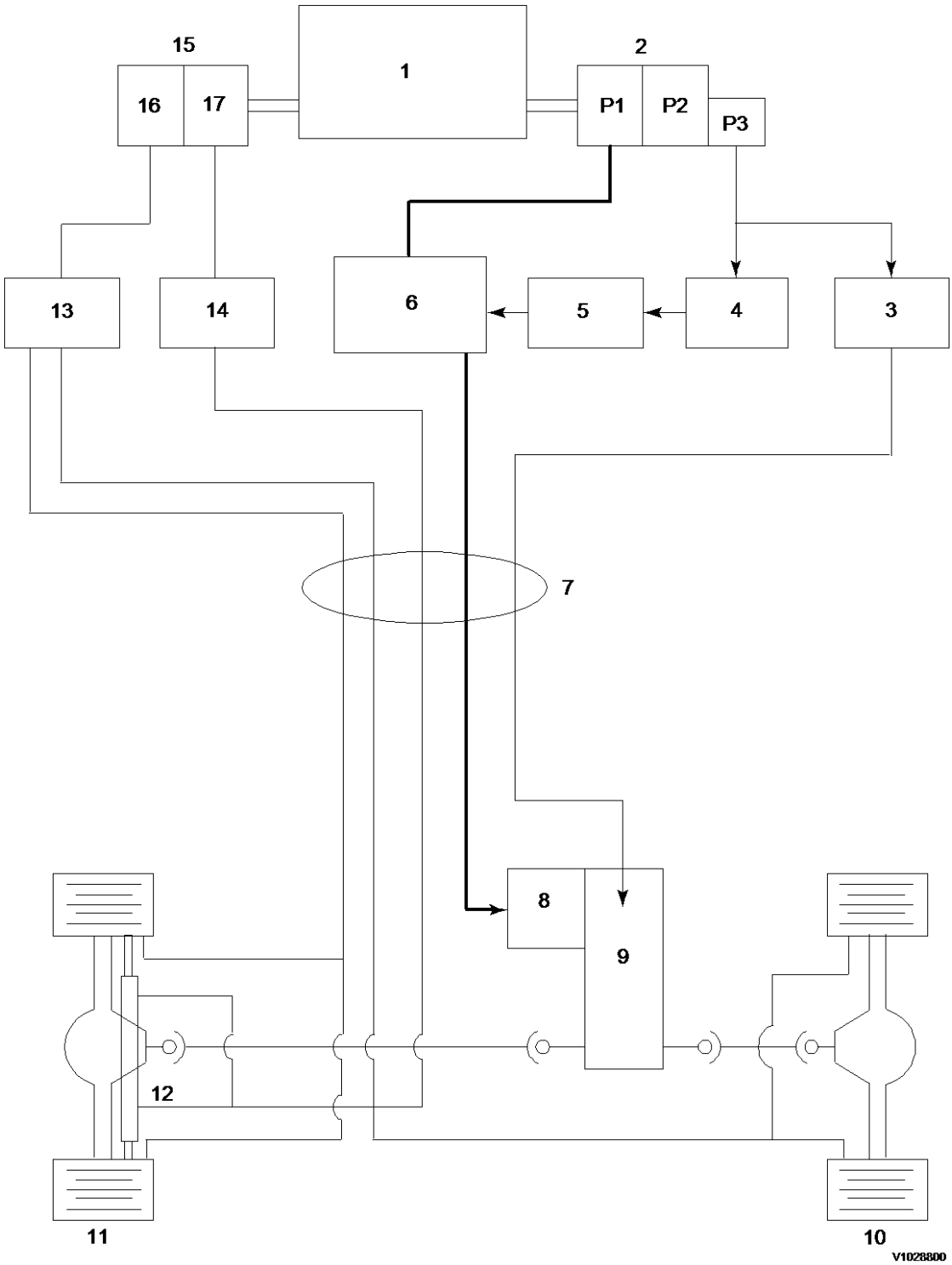

Figure 1

Power train, schematic diagram

1	Engine	7	Center passage	13	Brake valve
2	Main pump	8	Travel motor	14	Steering unit
3	1st / 2nd solenoid valve	9	Transfer gearbox	15	Gear pump
4	Travel pedal	10	Rear axle	16	Brake pump
5	Forward / reverse solenoid valve	11	Front axle	17	Steering pump
6	Main control valve	12	Steering cylinder		